TECHNICAL DATASHEET

Combiner for STP60 Converter

SOL-SC1-14ST-0-F1-21

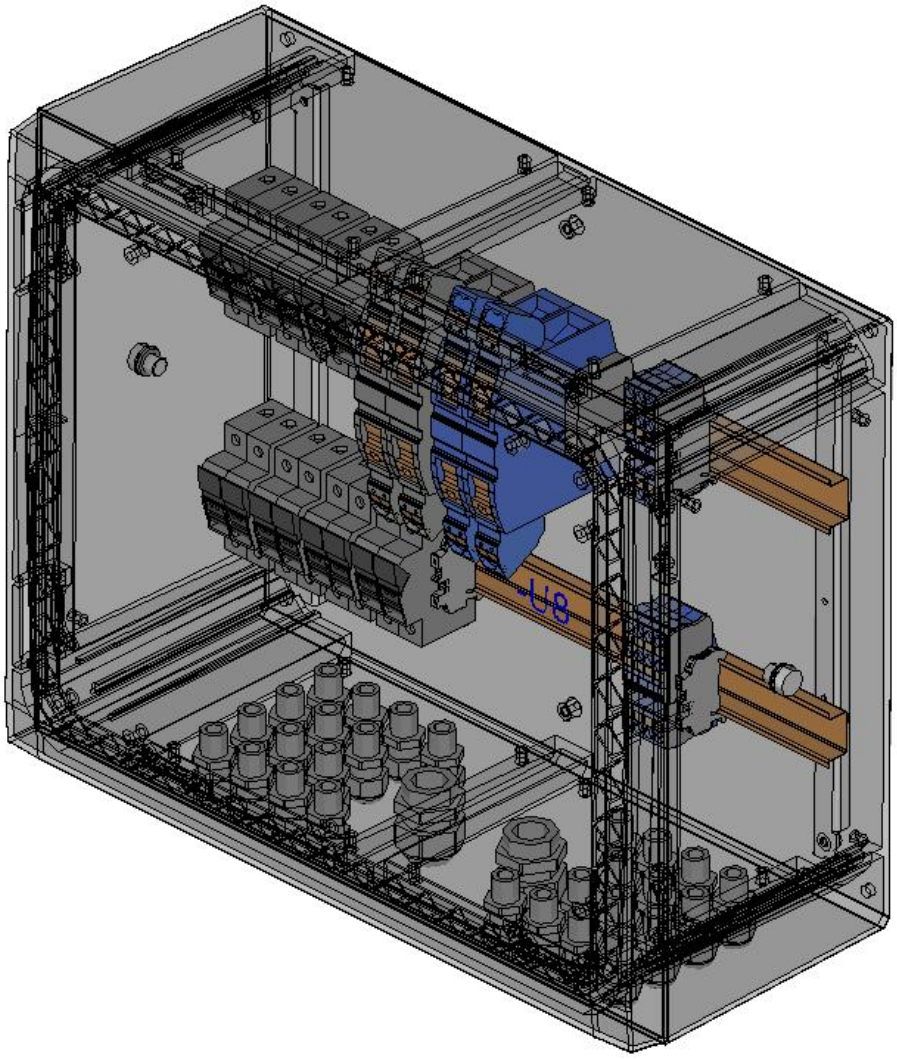

General technical data

Type definition: **SOL-SC1-14ST-0-F1-21**

- Max. continuous operating voltage U_{OCmax} = 1000V DC
- Max. current per string I_{MAX} = 14,25A (per string)
- Protection degree IP65
- Temperature range -20°C…+60°C (with derating above +45°C)
- Housing material Polycarbonate
- Housing type Fibox Arca 405021
- Dimensions (WxHxD in mm) 500x400x210
- Surge protection no surge protection

- DC Input strings
  - Number of strings: 14
  - Monitoring: No string monitoring
No voltage monitoring
  - Fuse holders: 14 pieces
  - Fuses: 10,3x38 Midget gPV fuses (No fuses included, must be ordered separately)
  - String entry for “+” side: 14 pieces cable gland M16
  - String entry for “-” side: 14 pieces cable gland M16
  - Clamping range M16 gland: 5…10mm
  - Conductor size inputs: 1,5mm²…10mm² (stranded conductor with ferrule)
1,5mm²…16mm² (solid conductor)
Defined by the push-in terminal on the minus side (PT 10-TWIN BU))
- DC output
  - DC output for “+” side: 1 pieces cable gland M32
  - DC output for “-” side: 1 pieces cable gland M32
  - Clamping range M25 gland: 18…25mm
  - Conductor size outputs: 25mm²…95mm² (stranded conductor with ferrule)
25mm²…95mm² (solid conductor)
  - Max. Output current: 199,5A
  - Connection aluminum conductor: with AL/CU cable lug

Layout/Drawings

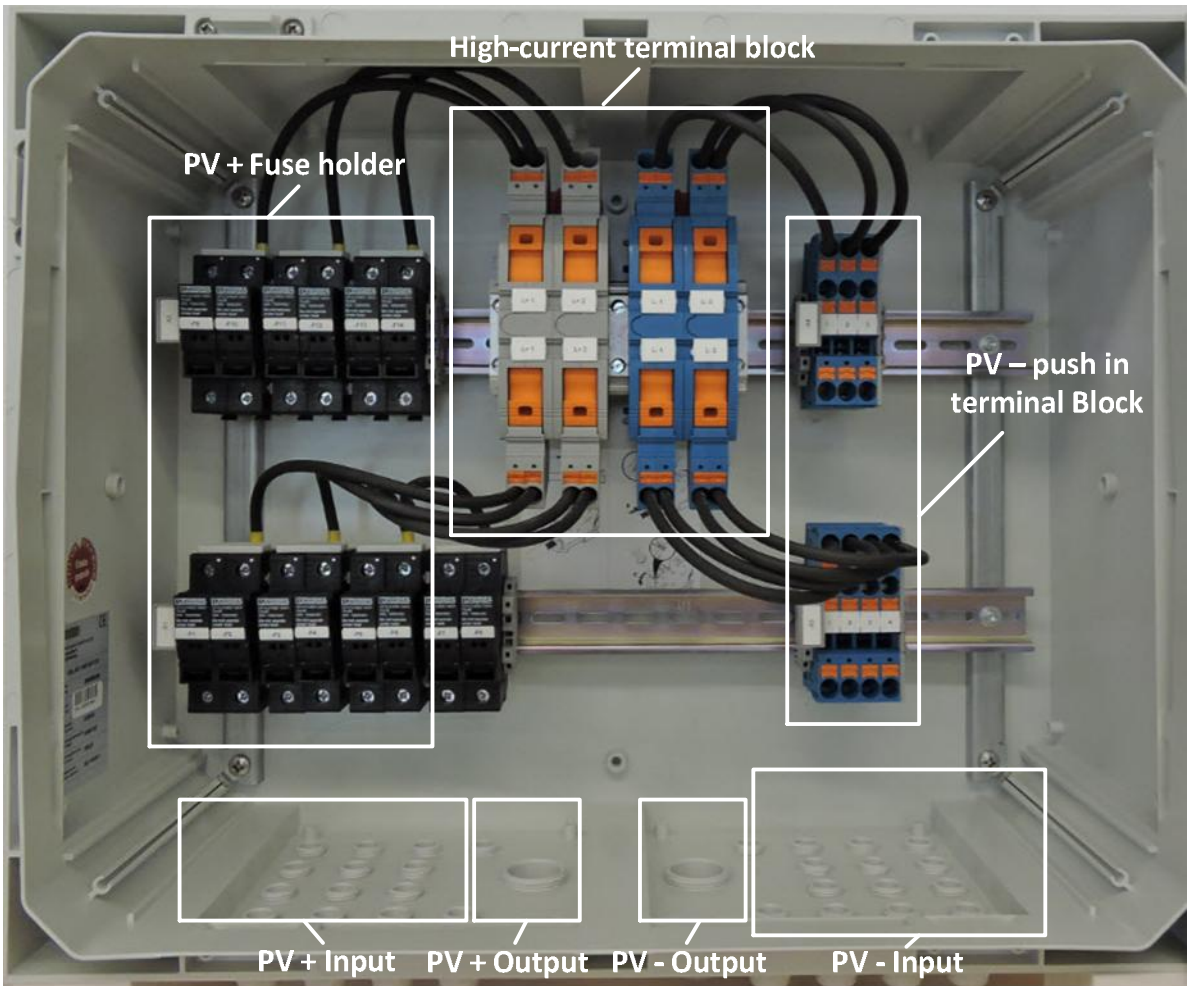

Overview

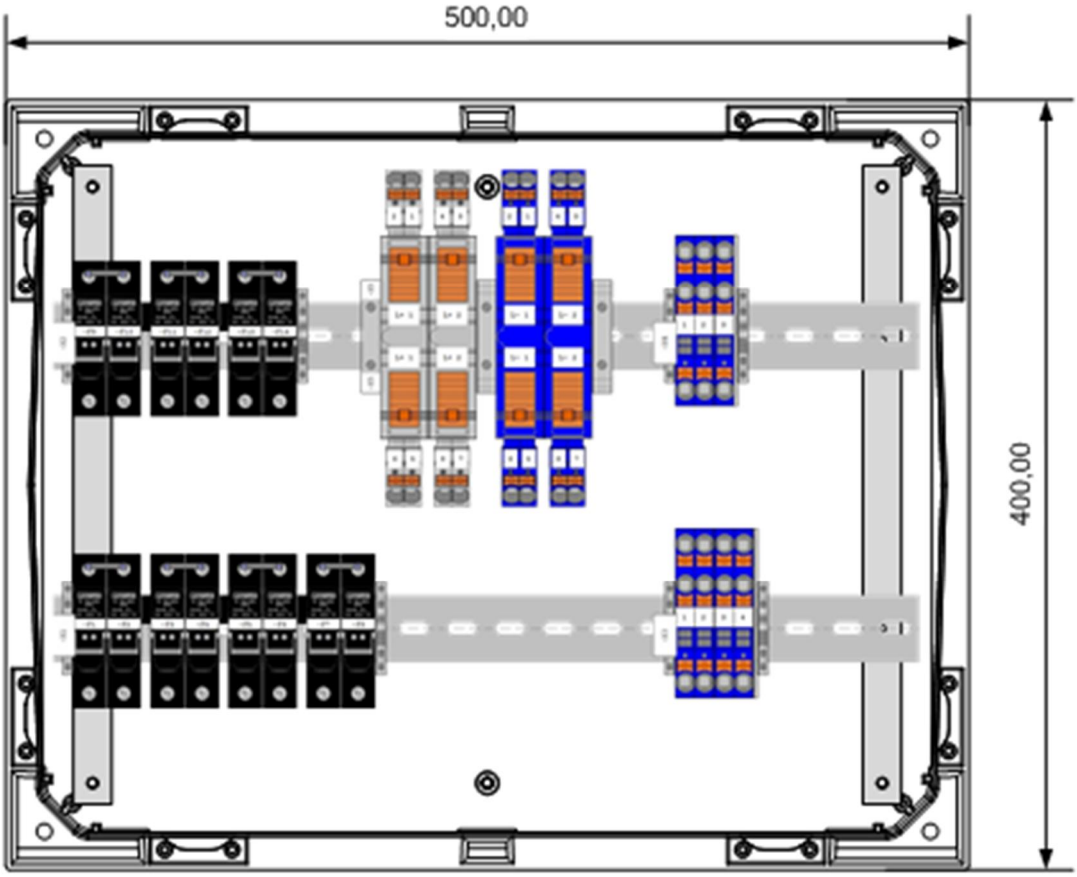

Frontview

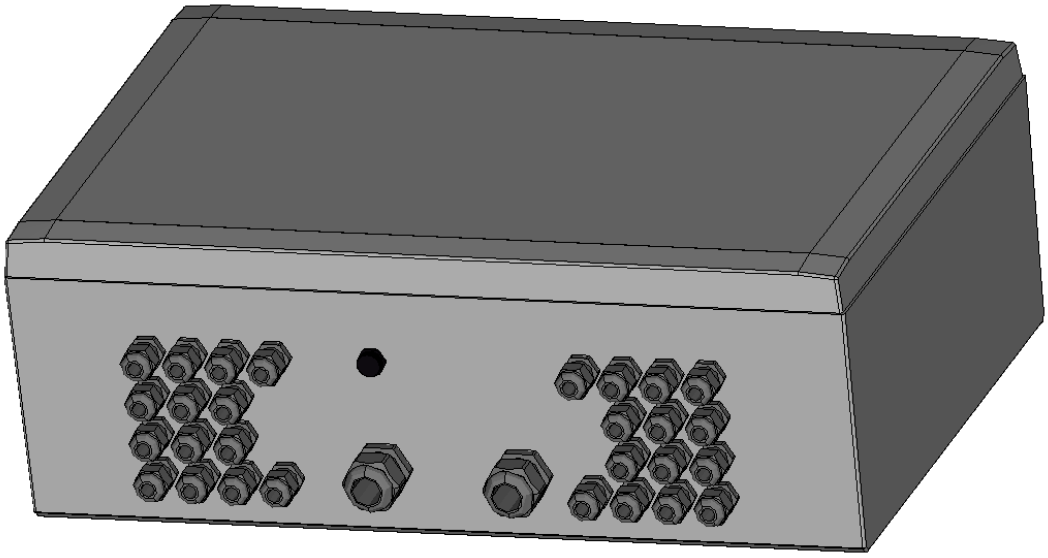

Bottom view